1166BA sparkproof extra-long needle knurled nose pliers
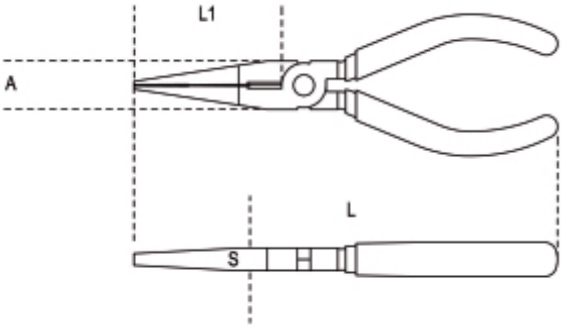
	art.	L mm	L1 mm	A mm	S mm	g
011660815	1166BA 150	150	54	20	10	165